전자 브레이크 시험 성적서

(TEST REPORT FOR MAGNETIC BRAKE)

수 주 처 CUSTOMER		제 조 일 자 DATE OF MANUFACTURE	
품 명 EQULPMENT	AC MAGNETIC DISC BRAKE	출 력 극 수 OUTPUT*POLES	3.7 KW * 4P
형 번 SERIAL NO	SHB 155 A	시 험 일 자 DATE OF TEST	

특 성 시 험

(CHATACTERISTIC TEST)

정 격 토 르 크 RATED TORQUE (STATIC)	(20회) 운전후 4.15 KG. M	초 기 토 르 크 INITIAL TORQUE	4.05 KG. M
절 연 종 별 INSULATION CLASS	B 종	관 성 모 멘 트 GD^2	0.0032 $KG.M^2$
정 격 전 압 RATED VOLTAGE	AC 440 V	정 격 전 류 RATED CURRENT	AC 0.25 A
소 비 전 력 WATT	110 W	저 항 RESISTANCE	500M OHM이상
초 기 갭 INITIAL GAP	0.5 mm	최 대 갭 MAXIMUM GAP	1.5 mm
검 사 수 량	EA		

절연특성시험

INSULATIOM TEST

내 압 시 험 WITHSTAND VOLTAGE TEST	1500 V/ 1min 양 호

TESTED BY (시 험)	CHECKED BY (검 토)	CERTIFIED BY (확 인)

삼 환 기 공 주소 : 서울시 구로구 온수동 100-34번지

SAM HWAN KI GONG ☎ 02) 2613-2035 / Fax : 2636-5207

HYOSUNG HEAVY INDUSTRIES

SPECIFICATION OF GEAR REDUCER

RS No.	251000131203	Project No.	F0228204-K1-0003	Designer	KIM.M.Y

CUSTOMER	세정티에스	ITEM No.	-
MODEL	F1HM27 3.7kW 4P 120:1	QUANTITY	2

DRIVEN MACHINE			
Application	-		
No. of rev.	14.6	(Norminal)	
Installation	■ INDOOR	☐ OUTDOOR	
Ambient temp.	-15 ~ 40	℃	
Operating time		hour per day	
Peak torque		kg·m	
Impact load	■ Uniform	☐ Medium	☐ Heavy
Load peak per hour	■ below5	☐ 5 ~ 10	☐ over 10

DRIVER			
Kinds	■ E.Motor	☐ Engine	☐ Others
Power	3.7	■ KW	☐ HP
Poles	4	Type	TE-F
Phase	☐ Single	■ 3	Ins. class F
Voltage	440	V	IP grade 55
Cycle	60	Hz	
Speed	1755	rpm	

SPECIFICATION OF REDUCER

Nominal Reduction Ratio	120 : 1	
Service factor of Reducer	1.4	(Min.)
Power cal.	☐ Niemann ■ AGMA	☐ ISO
Additional cooling	■No ☐Water	☐Fan
Lubricant	☐ OIL	■ GREASE
Method	■ Oil bath	☐ Forced
Viscosity	EP GREASE 00	Quantity 2.9 kg
Max. oil temp.	120	℃
Mean Noise Level(No Load, at 1m)	83	dB(A)
Vibration(No Load, r.m.s)	1.8	mm/s

DIRECTION OF REV.(View from shaft side)

High speed shaft	■ CW	■ CCW
Low speed shaft	■ CW	■ CCW
Arrangement of shaft	-	

MATERIAL & HEAT TREATMENT

Casing	GC200	-
Pinion	SCM415 or EQ.	HC
Gear	SCM415 or EQ.	HC
Internal Gear	-	-
Shaft(H. Speed)	-	-
Shaft(L. Speed)	SM45C	-

Symbol	HC:Carburizing HF:High Frequency HN:Nitriding QT:Quenching-Tempering

APPENDED DRAWINGS

Outline dwg. No.	EK2DO07675H038
Painting (Munsell No.)	0.5PB 3.2/4.4

WEIGHT (APPROX.)

Driver	-	kg	Geared Motor	172	kg
Others	-	kg	Total	172	kg

ACCESSARIES

NONE

REMARKS	Except details specified on this DATA SHEET, all subjects including test shall be performed in accordance with MAKER STANDARD. *** PLEASE REFER TO APPENDED DWG. ***

DESCRIPTION:

프리미엄효율, POSCO SZ, 단자박스 상부 TC1,BRAKE AC"B" 440V부착

HYOSUNG HEAVY INDUSTRIES	INDUCTION MOTOR DATA SHEET	PROJECT No.	
		HS No.	HMA01080000560
		L-SPEC No.	DSML21162F004M

SHEET 1 OF 1	CUSTOMER :	
FOR INFORMATION	JOB No. : N/A	ITEM No. :
SERVICE : N/A	SITE :	QUANTITY SETS

GENERAL DATA		PERFORMANCE DATA		
FRAME No.	112M	OUTPUT	3.7	kW
TYPE	TE-F	POLES	4	P
ENCLOSURE	TE	ROTOR TYPE	SQUIRREL CAGE	
COOLING METHOD	FC(IC411)	STARTING METHOD	DIRECT ON LINE	
INSULATION CLASS	F CLASS	PHASE	3	PHASE
TEMP. RISE AT FULL LOAD		FREQUENCY	60	Hz
RES. METHOD	80 K (at S.F:1.0)	SPEED (AT FULL LOAD)	1755	r/min
RATING	S1	PRIMARY		
LOCATION	INDOOR	VOLTAGE	440	V
ALTITUDE	LESS THAN 1000 m	NO LOAD CURRENT	4.3	A
HUMIDITY	LESS THAN 80 %	FULL LOAD CURRENT	7.1	A
AMBIENT TEMP.	40 ℃	LOCKED-ROTOR CURRENT	660	%
EXPLOSION PROOF TYPE	N/A	EFFICIENCY		
MOUNTING	V1	AT 1/2 LOAD	86.5	%
BEARING TYPE	ANTI-FRICTION	AT 3/4 LOAD	88.5	%
NDE/DE BRG. No.	6206ZZ / 6207ZZ	AT FULL LOAD	89.5	%
BRG. LUBRICATION	N/A	POWER FACTOR		
PROTECTION GRADE	IP55	AT 1/2 LOAD	61.5	%
SERVICE FACTOR	1.15	AT 3/4 LOAD	71.5	%
DRIVE	BOTH	AT FULL LOAD	76.5	%
SHAFT		TORQUE		
EXTENSION	SINGLE	FULL LOAD	2.05	kg-m
EXTERNAL THRUST	N/A		20.1	N-m
NOISE LEVEL(MEAN VALUE AT 1m FROM MOTOR)		LOCKED ROTOR	200	%
NO-LOAD	STANDARD	BREAKDOWN	250	%
VIBRATION	1.6 mm/s (r.m.s)	MOTOR GD^2	0.07	$kg\text{-}m^2$
NUMBER OF CONSECUTIVE STARTS	COLD : 2 / HOT : 1 (4P)	MAX LOAD GD^2 AT MOTOR SHAFT	10.5	$kg\text{-}m^2$
		MOTOR APPROX. WEIGHT	47	kg
ROTATION(VIEWED FROM DE)	C.C.W	PAINTING	0.5PB 3.2/4.4 (ENAMEL)	

ACCESSORIES (OPTIONAL)		SUBMITTAL DRAWINGS	
TEMPERATURE DETECTOR		OUTLINE DIMENSION	ES1AS40205
WINDING	NO	CONDUIT BOX & COVER	ES1B100802
TYPE	N/A	SPEED-TORQUE & CURRENT CURVE	1ST
BEARING	NO	THERMAL LIMIT & TIME-CURRENT CURVE	1TL
TYPE	N/A	LOAD vs POWER FACTOR & EFFICIENCY	1PE
SPACE HEATER	NO		
RATING	N/A		

APPLICATION STANDARDS
IEC60034-1

<REMARKS>
1. ABOVE ALL DATA ARE CALCULATED AT 100% VOLTAGE.
2. PREMIUM EFFICIENCY TYPE MOTOR

< NOTE > 1. THESE DATA ARE ONLY DESIGN VALUES AND SHALL BE GUARANTEED WITH TOLERANCE OF APPLICATION STANDARD.
2. EXCEPT FOR STATEMENTS SPECIFIED ON THIS SHEET, ANYTHING ELSE SHALL BE IN ACCORDANCE WITH MAKER'S STANDARD.
3. THE TEMPERATURE MEASURED AT BEARING HOUSING DOES NOT EXCEED 105℃.

REV. NO	DATE	PREPARED	CHECKED	APPROVED
0	2020-02-18	S.U.LEE	J.H.CHA	T.H.KIM

A4(210X297)

HYOSUNG HEAVY INDUSTRIES	SPEED - TORQUE & CURRENT CURVE	Curve No.
		1ST

OUTPUT	3.7	kW	POLES	4	P
VOLTAGE	440	V	FREQUENCY	60	Hz
FULL LOAD TORQUE	2.05	kg·m	FULL LOAD CURRENT	7.1	A
LOCKED ROTOR TORQUE	200	%	LOCKED-ROTOR CURRENT	660	%
BREAKDOWN TORQUE	250	%	SPEED (at FULL LOAD)	1755	r/min
GD^2 of LOAD :	-	$kg·m^2$	GD^2 of MOTOR	0.07	$kg·m^2$

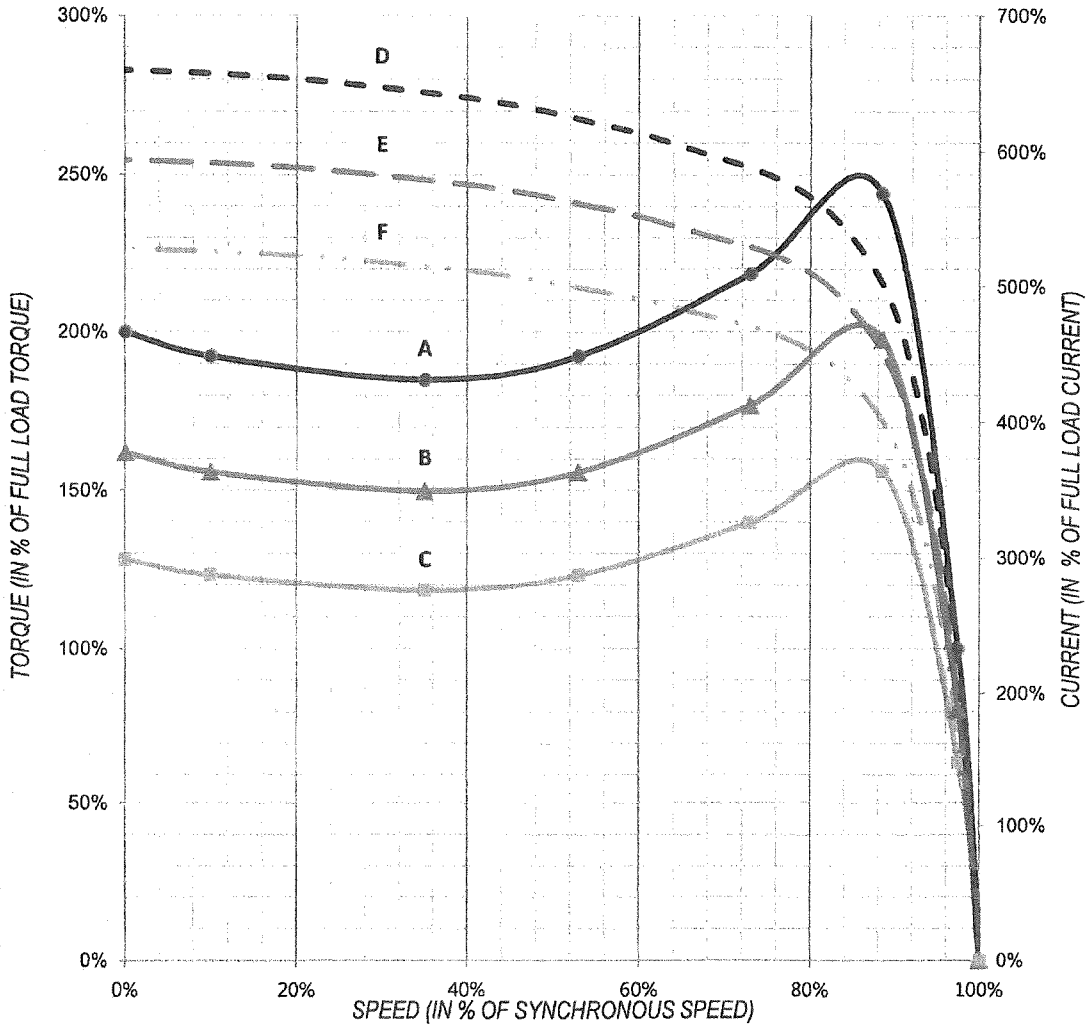

NOTE

A	: SPEED-TORQUE CURVE AT	100%	RATED VOLTAGE
B	: SPEED-TORQUE CURVE AT	90%	RATED VOLTAGE
C	: SPEED-TORQUE CURVE AT	80%	RATED VOLTAGE
D	: SPEED-CURRENT CURVE AT	100%	RATED VOLTAGE
E	: SPEED-CURRENT CURVE AT	90%	RATED VOLTAGE
F	: SPEED-CURRENT CURVE AT	80%	RATED VOLTAGE

HYOSUNG HEAVY INDUSTRIES	THERMAL LIMIT & TIME - CURRENT CURVE	Curve No.
		1TL

OUTPUT	3.7	kW	POLES	4	P
VOLTAGE	440	V	FREQUENCY	60	Hz
FULL LOAD TORQUE	2.05	kg·m	FULL LOAD CURRENT	7.1	A
LOCKED ROTOR TORQUE	200	%	LOCKED-ROTOR CURRENT	660	%
BREAKDOWN TORQUE	250	%	SPEED (at FULL LOAD)	1755	r/min
GD^2 of LOAD :	-	$kg·m^2$	GD^2 of MOTOR	0.07	$kg·m^2$

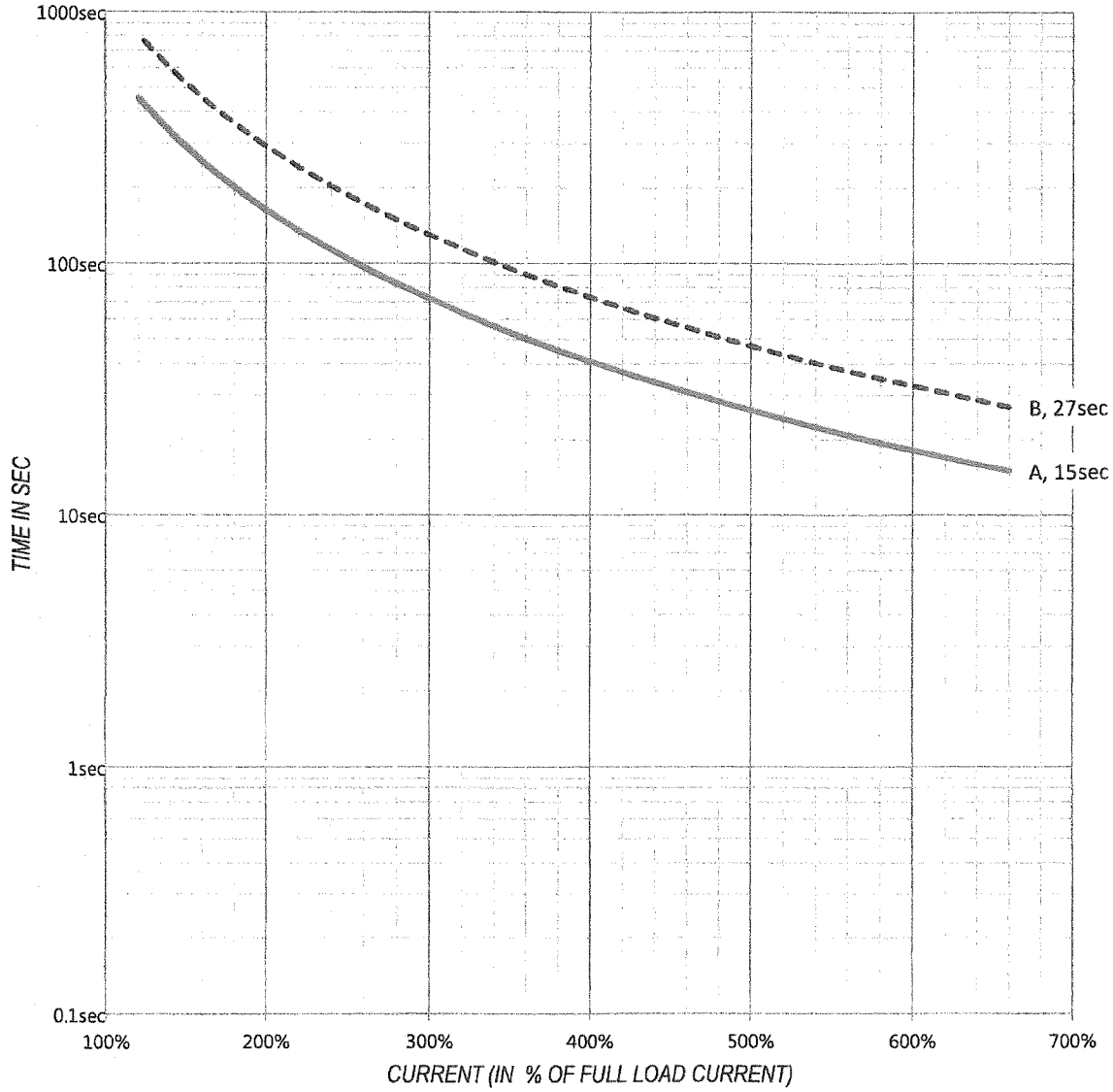

NOTE

A : THERMAL LIMIT CURVE AT HOT CONDITION

B : THERMAL LIMIT CURVE AT COLD CONDITION

C ※TIME-CURRENT CURVES(C,D,E) NEED BELOW DATA TO BE DRAWI

D * LOAD GD2 AT MOTOR SHAFT

E * SPEED-TORQUE CURVE OF LOAD

HYOSUNG HEAVY INDUSTRIES	LOAD - POWER FACTOR & EFFICIENCY CURVE	Curve No.
		1PE

OUTPUT	3.7	kW	POLES	4	P
VOLTAGE	440	V	FREQUENCY	60	Hz
FULL LOAD TORQUE	2.05	kg·m	FULL LOAD CURRENT	7.1	A
LOCKED ROTOR TORQUE	200	%	LOCKED-ROTOR CURRENT	660	%
BREAKDOWN TORQUE	250	%	SPEED (at FULL LOAD)	1755	r/min
GD^2 of LOAD :	-	$kg \cdot m^2$	GD^2 of MOTOR	0.07	$kg \cdot m^2$

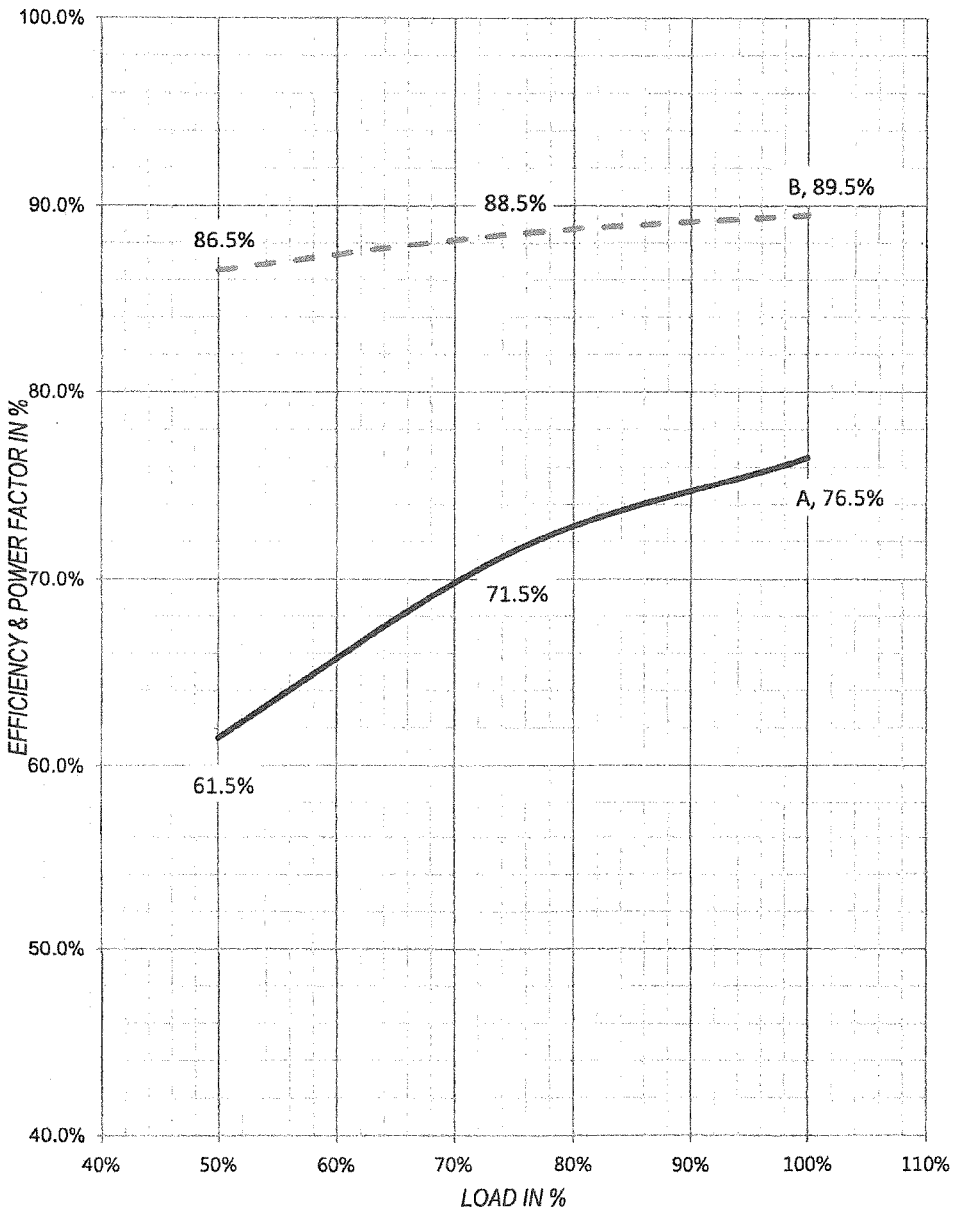

NOTE

A : LOAD - POWER FACTOR CURVE

B : LOAD - EFFICIENCY CURVE

No.	NAME	MATERIAL	DWG/MATL No.	CODE	Q'TY	SIZE	WEIGHT	REMARK
					0			

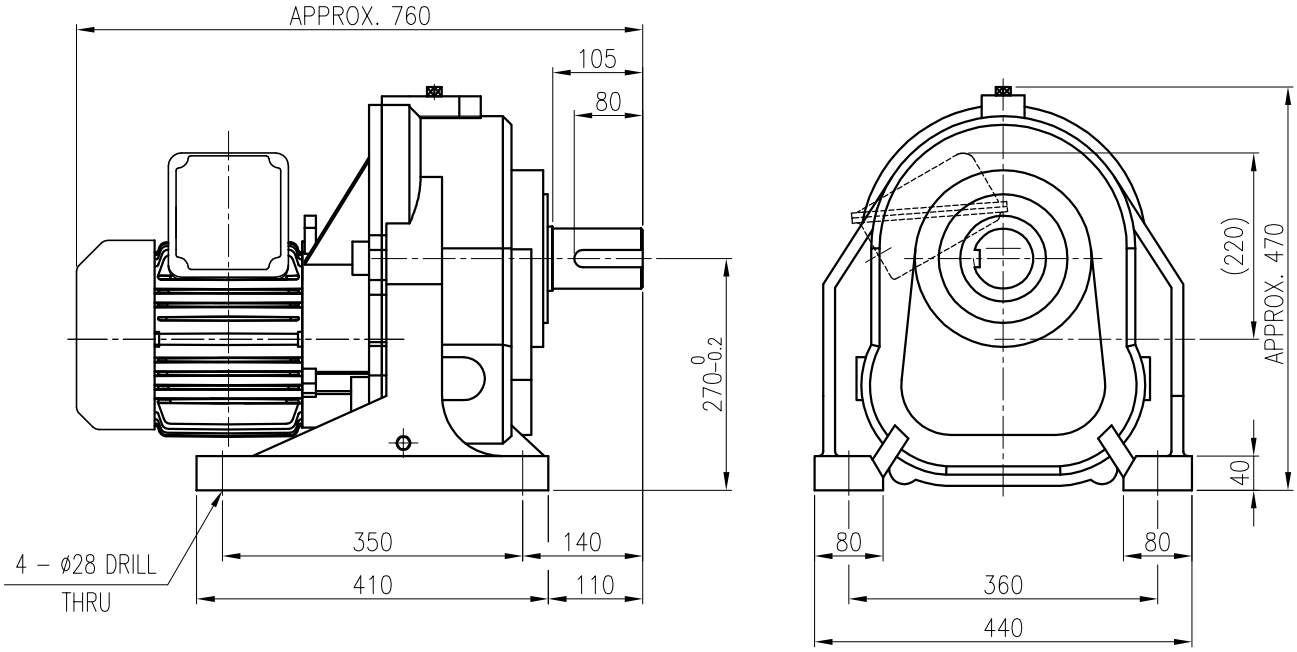

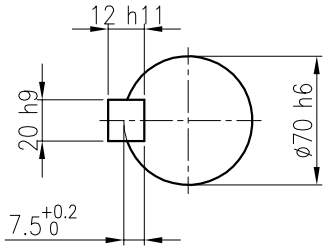

OUTPUT SHAFT

KEY 20 x 12 x 70

			BEARING			
OIL SEAL			2ND PINION	6306ZZ	6306ZZ	GREASE : NLGI(EP)00
MOTOR SHAFT	D(M) 35 x 47 x 7		3RD PINION	6307ZZ	6308ZZ	ABOUT 3.0 kg
OUTPUT SHAFT	D(M) 75 x 100 x 13		OUTPUT SHAFT	6311ZZ	21315	WEIGHT 168 kg

No.	DATE	DESCRIPTION of REVISION

DWG NAME: 외형도 OUTLINE DIMENSION

DWG No.: EK2D007675H038

UNIT: mm

SCALE: 1:1

DESIGNED	CHECKED	REVIEWED	APPROVED	DATE	2020-08-11
2022.08.11 김민영				REVISION No.	00
				THIRD ANGLE PROJECTION	

HYOSUNG HEAVY INDUSTRIES

TYPE: F1HM_27_3.7kW_75~120:1_프리미엄

REF. No.: –

A

A4(210X297mm) FORM CE-14-0100-4A4 2013.11.20

이 도면상에 표시된 정보는 효성중공업(주)의 소유이며 당사의 사전 서면동의 없이 무단사용을 금합니다.

The information written in this drawing is HYOSUNG HEAVY INDUSTRIES's property, and may not be disclosed and/or reproduced without the prior official permission of HYOSUNG HEAVY INDUSTRIES Corp.

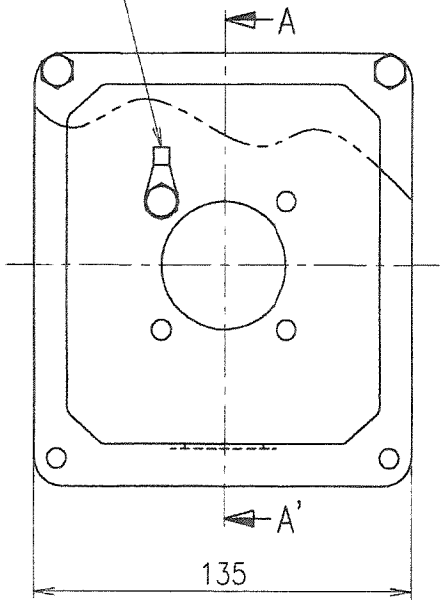

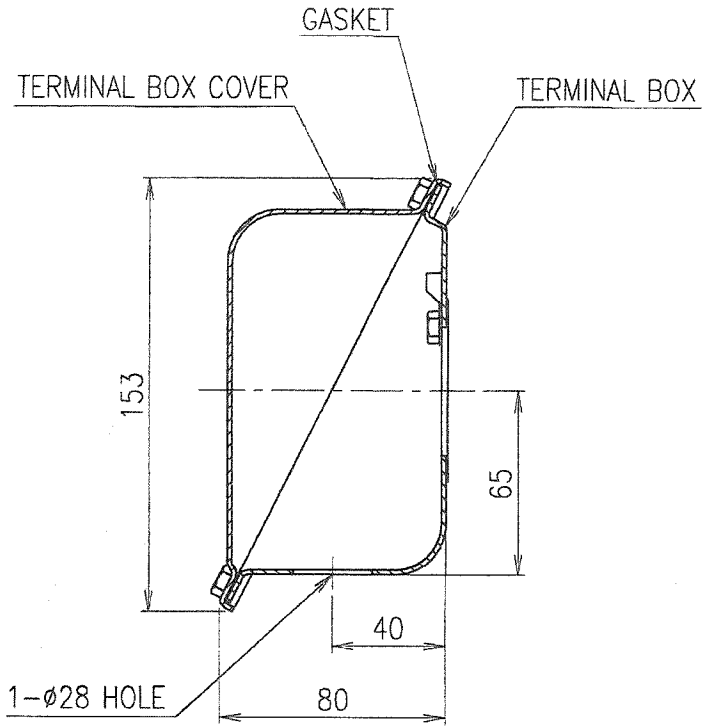

SEC. A-A'

* STEEL BOX

No.	DATE	DESCRIPTION of REVISION
1	15.01.14	Totally revised

DWG NAME	저압 유도전동기 단자박스외형도 TERMINAL BOX DRAWING						
DWG No.	ES1B100802				UNIT	mm	
					SCALE	1:2.5	
DESIGNED	CHECKED	REVIEWED	APPROVED		DATE	2015-01-14	
2015.01.14 이순의	2015.01.16 홍수환		2015.01.16 고병욱		REVISION No.	01	
					THIRD ANGLE PROJECTION		
TYPE	M.C MOTOR FR.100~132		REF. No.	DSMK10369H02			©

HYOSUNG

A4(297X210mm) FORM CE-14-0100-4A4 2013.11.20

The information written in this drawing is HYOSUNG's property, and may not be disclosed and/or reproduced without the prior official permission of HYOSUNG Corp.

이 도면에 표시된 내용은 효성중공업(주)의 재산임을 밝히며 무단 복제 및 사용을 금합니다.